402-496-496/3-403-404

402M

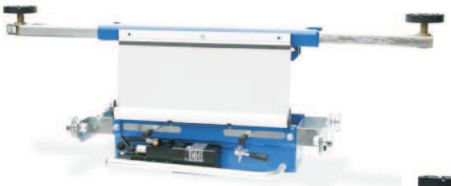

496P

Traverse idrauliche

Hydraulic jacking beams

Traverses hydrauliques

Hydraulische Achsfreiheber

403P

404M

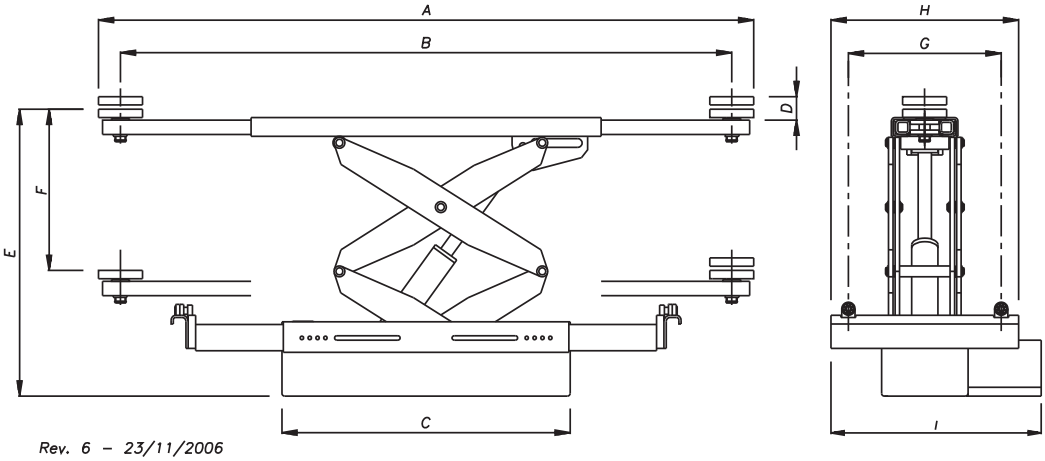

Rev. 6 – 23/11/2006

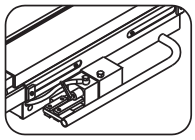

Pompa manuale
Pompe manuelle
Manual pump
Handpumpe

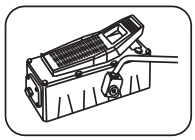

Pompa pneumatica
Pompe pneumatique
Pneumatic pump
Pneumatischer Pumpe

	Capacity	A	B	C	D	E	F	G max	H max	I max
	kg	mm	mm	mm	mm	mm	mm	mm	mm	mm
402M-402P	1600	935/1625	810/1500	750	30/60	215/505	290	370	460	520
496M-496P	2000	935/1625	810/1500	660	30/60	245/680	435	370	460	520
496/3M-496/3P	3000	935/1725	810/1600	660	30/60	255/690	435	370	460	520
403M-403P	3000	935/1725	810/1600	660	30/60	220/500	280	370	460	520
404M-404P	4000	935/1625	810/1500	760	30/60	260/585	325	390	490	585

WERTHER

402-496-496/3-403-404

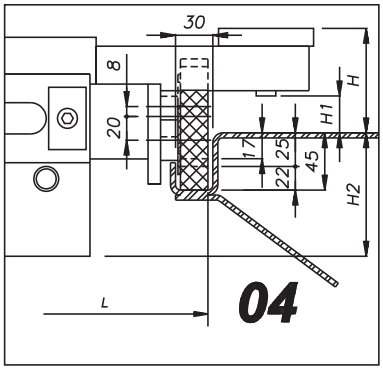

MODEL	L (mm)	H (mm) min.	H1 (mm)	H2 (mm)
402M.04-402P.04	855/1255	84÷112	2÷30	131÷103
496M.04-496P.04	790/1160	86÷114	4÷32	157÷129
496/3M.04-496/3P.04	790/1160	96÷124	14÷42	156÷128
403M.04-403P.04	790/1160	84÷112	2÷30	136÷108

Rullo / Galet / Roller / Rolle

Sollevatore / Pont élévateur / Lift / Säulen

REV. 6 – 23/11/2006

04*: (443) - (443JC) - (443LT) - (443ATLT) - (450BLV) - (450JC) - (450JCB) - (442LP)

*These models lift if installed in conformity to MOT could not receive the jacking beam models 402M - 402P, but only the models 496M-496P-496/3M-496/3P.

WERTHER INTERNATIONAL S.p.A.
Via F.Brunelleschi, 12 - 42040 Cadè (RE) Italy - Tel.++39 0522 9431 - Fax ++39 0522 941997
www.wertherint.com - e-mail sales@wertherint.com

Il fabbricante, nell'ambito del costante miglioramento dei propri prodotti, si riserva il diritto di apportare modifiche senza preavviso. - The company reserves the right to introduce improvements in design or specification without prior notice. - Der Hersteller behalt sich das Recht vor, im Zuge der techni-schen Weiterentwicklung, technische Eigenschaften ohne Vorankundigung zu ändern. - Le fabriquant dans le but d'améliorer constamment ses produits, se réserve le droit d'apporter des modifications sans préavis - La compania se reserva de todos modos el derecho de aportar todas las modificaciones que considera necesarias para mejorar la estética o el funcionamiento de los productos, sin tener la obligación de avisar de ello.